Innovative-Developing Enterprise Calmet Ltd.

- founded in 1989
- designing, production, selling and servicing new kind of calibrators and electric equipment testers
- Calmet = CALibrators + METrology
- since 1996 – electricity meters testing and power network parameters analysing
- since 2002 – generating and measuring network quality parameters
- since 2006 – automation of electro-utility automatic protective equipment testing

Calmet's Presentation

Mesurement Equipment since 1989

Customer Support in problems solving

Service

Power network analysers, Energy meter testers, Current Transformers testers, Power quality analysers

1 phase

3 phase

3 phase 0,05%

Power Quality

Voltage, Current, Power & Resistance Calibrators and Test Benches

3 phaseU,I,φ,P,Q,S,E

Control Software for measurement equipment

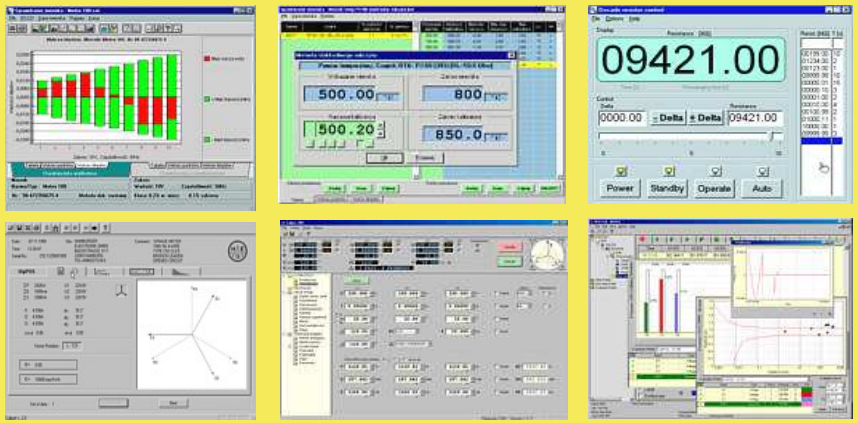

1 phase U,I,φ

Resistance GΩ

=,~,U,I

Phantom Load

3 phase Test Bench

Energy Meter Tester and Power Network Analyser

type Caltest 10

Caltest 10 single phase energy meter tester

- accuracy 0,5% or 0,2%
- current range 0,01…100A (10A)(1000A)(3000A) with current clamp input enables connection without break in circuit
- power up from measurement circuit
- dummy load function
- graphic LCD display
- internal memory for results
- local results printing
- PC Software for data analysis

AC Current Source (Phantom Load)
type CC11

CC11 single phase AC current source

- loading of single and three phase electricity meters
- current setting range from 0,005A to 5,000A
- digital measurement of output current
- silent operation and no heating
- no need to disconnect meter and end user from circuit during electricity meter testing on site
- powering directly from measurement circuit
- galvanically isolated output
- accuracy class 0,2% for testing of AC current devices

Power Network Analyser, Energy Meter Tester & Current and Potential Transformer Tester type Caltest 300

Portable Analyser Caltest 300
three devices in one case:

- energy meter tester
- CT & PT tester in low & medium voltage networks
- power quality analyser
- high accuracy 0,05% (or 0,1%)
- wide range of input currents 0,005...3000A
- vector and oscilloscope charts of three phase network
- recording and analyse of power quality

Power Calibrator & measurement instruments Tester C300

3-phase Calibrator
3x [0…560V, 0...120A]
Accuracy: 0.05%

Possibility to set any phase angle between voltages and currents
Programmable harmonics up to 31

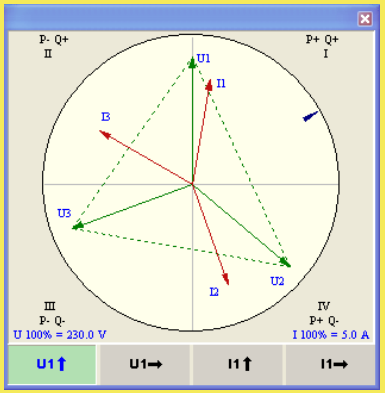

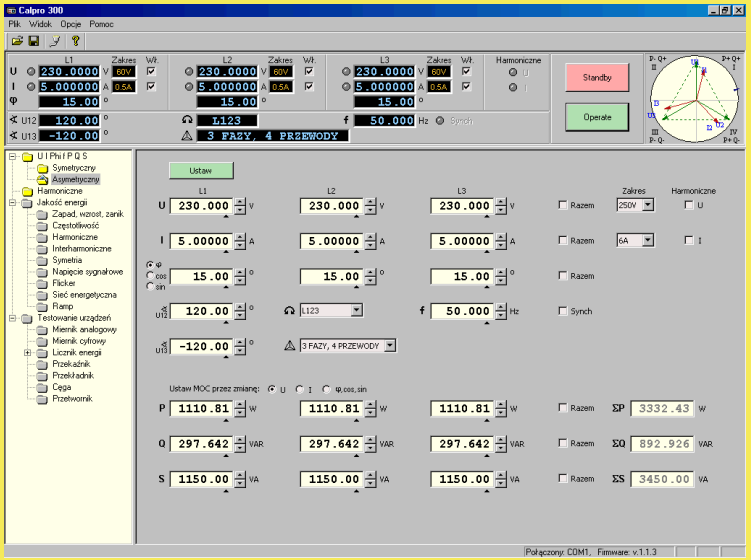

Automatic testing:

- energy meters (0.05%, 0.02%)
- protective relays
- current transformers
- current clamps
- measurement transducers

Calibrator / tester C300 is used for adjusting, checking and verification of measuring instruments used in power engineering:

✓AC Voltmeter

✓AC Ammeter

✓Clamp Meter

✓Phase Meter

✓Power Factor Meter

✓AC Current Clamp

✓Transducer

✓Current Transformer

✓Power Meter P, Q, S

✓Protective Relay

✓Power Quality Analyzer

✓Electricity Meter

Measurement devices test bench - Idea of Test System

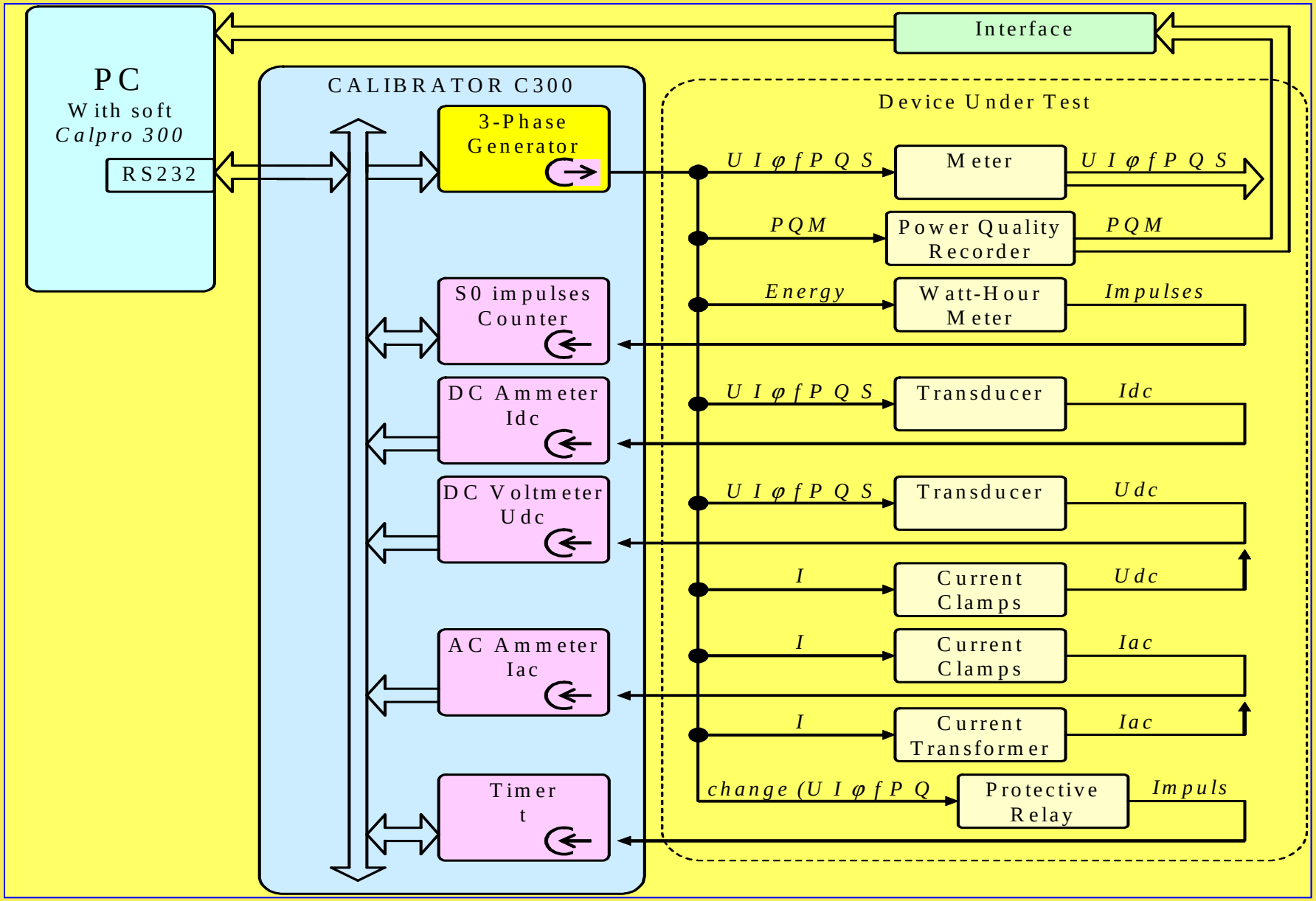

Four Position Meter Test Bench type TB40

TB40 – Four Position Meter Test Bench

- new generation of the Meter Test Bench
- accuracy 0,05% up to 3x120A and 3x560V
- programmed form and special shapes of currents and voltages
- automatic test procedures
- extremely compact design size and light weight
- AC single phase power supply operation only

Power Network Analyser and Energy Meter Tester type Calport 100Plus

Calport 100 Plus – Portable Tester of 3 – phase energy meters, Current and Potential Transformers

- **multifunction:**
  - **Connection verification – vector diagram**
  - **Power network parameters measurement**
  - **Harmonics analysis – U, I, P, Q**
  - **Energy meter testing**
  - **CT & PT ratio & burden testing in 3-phase circuits**
- **accuracy 0,1% (or 0,2%)**
- **wide range of currents 0,005...3000A**
- **data output:**
  - **Graphic LCD display,**
  - **Internal memory for results,**
  - **Local printing,**
  - **PC Software for data analysis**

Functions of the analyser Calport 100Plus

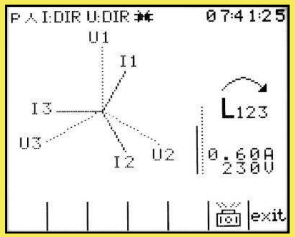

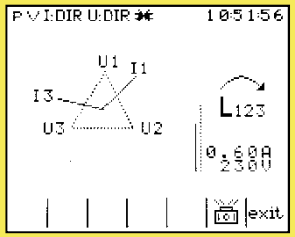

Verification of power network wiring in "star" and "delta" connection – graphical display of three phase voltage and current vector.

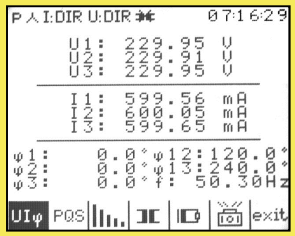

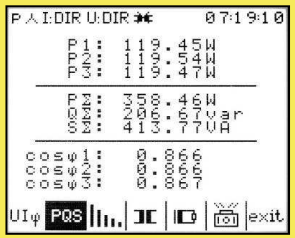

Measure of three phase power network parameters – digital measure of voltages, currents, active, reactive and apparent power in one and three phase, phase shifts and cosφ, active and reactive energy, frequency. Programming of voltage and current transformers ratios.

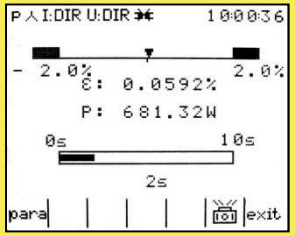

Testing of active and reactive energy meters directly on site – functions of computing meter error directly in percentages with method of setting time of measurements or number of impulses. Input in S0 standard is used for testing energy meters with impulse output. Photo head CF101 is used for automatic counting of meter rotor turns for testing inductive meters. Photo head CF100 is used for automating testing of meters with LED.

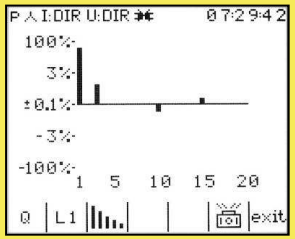

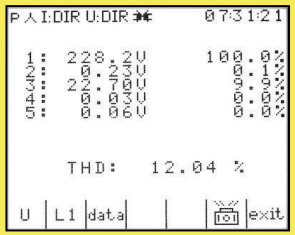

Full harmonics analysis of phase voltages and currents as well as up to 20th harmonic analysis of active and reactive power for diagnostic of distortion sources. Graphical and numerical presentation of results.

Functions of the analyser Calport 100Plus

Measure of active and reactive energy with method of setting time periods for verification of energy meter counters and testing of maximum power meters as well as measure maximum powers.

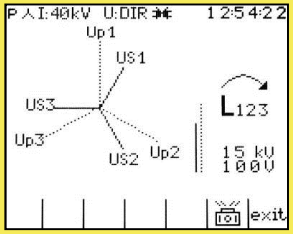

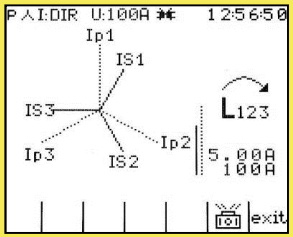

Function of computing ratio error of current (CT) and potential transformer (PT) directly in [%] and phase error of transformer in primary installations up to 40kV.

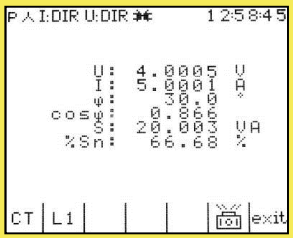

Function of current (CT) and potential transformer (PT) burden measurement.

Front plate of the analyser Calport 100Plus

Input voltage terminals U1, U2, U3 for current measure with current clamps and for primary voltage measure

Input current terminals I1, I2, I3 for current measure with current clamps and for primary voltage measure

Current sockets: I1, I01 I2, I02 I3, I03

Graphic Liquid Crystal Display

Voltage sockets: U1, U2, U3, U0

Keyboard and function keys

Printer's and PC computer's socket

Photo head's socket

Supply switch

Power cord's socket

Metrological parameters of the analyser Calport 100Plus

Function / parameter	Range	Error **	
		Class 0,1	Class 0,2
Voltage	30…480V 0,05...30V	±0,1% ±0,1%*	±0,2% ±0,2%*
Direct current	0,04…12A 0,001…0,04A	±0,1% ±0,1%*	±0,2% ±0,2%*
Current with clamps 100A for current inputs I	0,5…100A 0,01…0,5A	±0,2% ±0,2%*	±0,2% ±0,2%*
Current with clamps 100A for voltage inputs U	0,5…100A 0,01…0,5A	±0,5% ±0,5%*	±0,5% ±0,5%*
Current with clamps 3000A	60...3000A 0,3...60A	±1% ±1%*	±1% ±1%*
Power and energy direct measurement	0,04...12A / 30...480V 0,001...0,04A / 30...480V	±0,1% ±0,1%*	±0,2% ±0,2%*
Power and energy measurement with clamps 100A	0,5...100A / 30...480V 0,01...0,5A / 30...480V	±0,2% ±0,2%*	±0,2% ±0,2%*
Power and energy measurement with clamps 3000A	60...3000A / 30...480V 0,3...60A / 30...480V	±1% ±1%*	±1% ±1%*

Metrological parameters of the analyser Calport 100Plus

Function / parameter	Range	Error **	
		Class 0,1	Class 0,2
Power and energy measurement with LiteWire sensors	30...2000A / 0,5...40kV	±0,1%±Em	±0,2%±Em
Resolution of energy meter error measurement "ε"		0,0001%	
Phase shift direct connection measurement with clamps 100A measurement with clamps 3000A measurement with LiteWire sensors	0...±360°	 ±0,4° ±0,5° ±0,5° ±2,0°	 ±0,4° ±0,5° ±0,5° ±2,0°
Power factor cosφ and sinφ	0,000...±1,000	±0,01	±0,01
Frequency	45...65Hz	±0,05Hz	±0,05Hz
Ambient temperature influence	0,1 of error per 1°C in temperature range -5...+20°C and +26...+50°C		

*) of range
**) power and energy errors related to apparent power
Em – sensor basic error, Em = 2% for LiteWire sensors

Standard equipment of the analyser Calport 100Plus

Photo head for meters with LED, S0 cable, photo head's holder

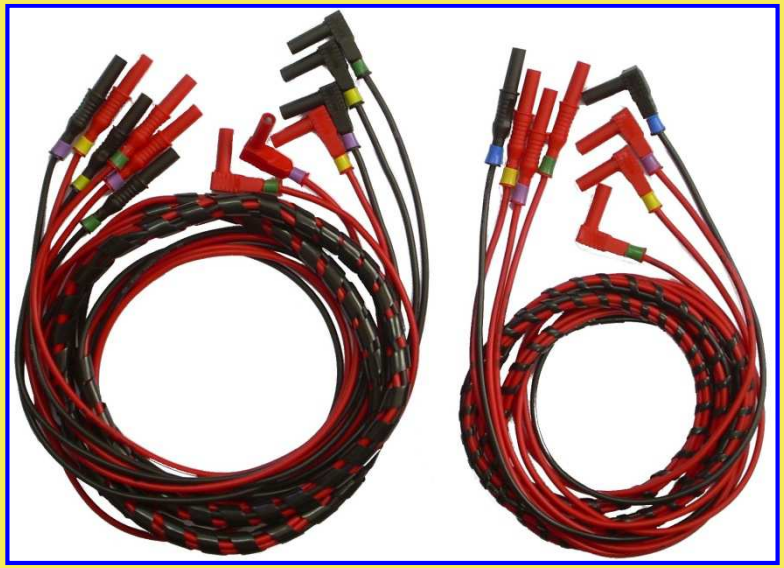

Set of voltage and current cables

Power cord, RS232 cable, USB/RS232 adapter, 2xfuse

Optional equipment of the analyser Calport 100Plus

Transportation case

Calsoft 100 programme for PC

Portable printer

Photo head for inductive meters

Clamps 100A, 3pcs.

AKD100 set of adapters and crocodiles

Calmet Ltd.

Zielona Gora ul. Kukulcza 18
Poland www.calmet.com.pl

<u>Optional</u> equipment of the analyser Calport 100Plus

Electronic compensated clamps for current measurement up to 1000A in class 0,5

Electronic compensated flexible clamps with converter for current measurement in ranges 30/300/3000A

<u>Optional</u> equipment of the analyser Calport 100Plus

AmpLiteWire 2000A current sensors for current measurement up to 2000A @ Umax 40kV

VoltLiteWire voltage sensors for voltage measurement up to 40kV

PC Software for the analyser Calport 100Plus

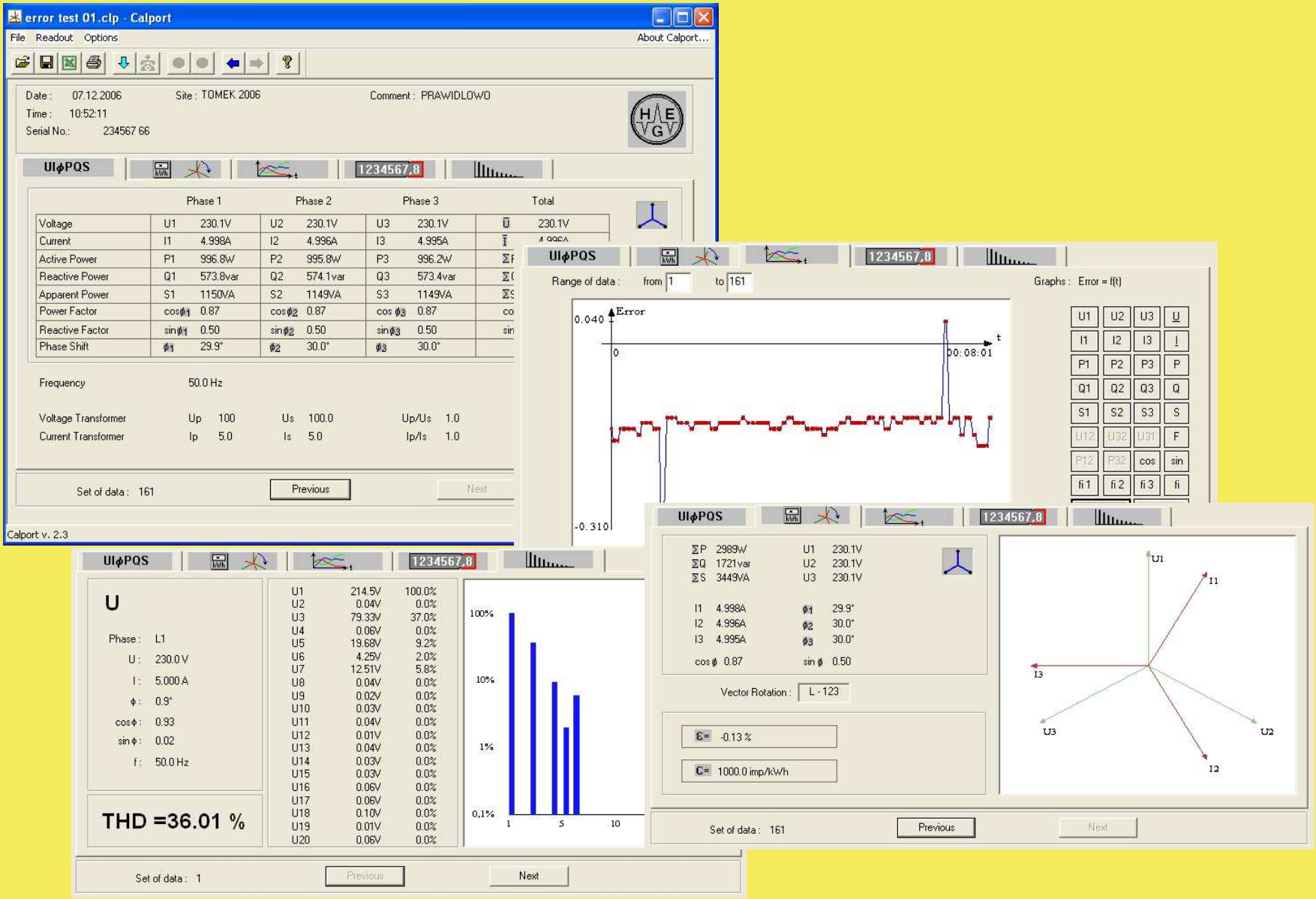

CHECKING THE ERROR OF THE THREE PHASE METER USING ANALYSER Calport 100Plus

Connecting of the Analyser Calport 100Plus to three phase meter directly connected

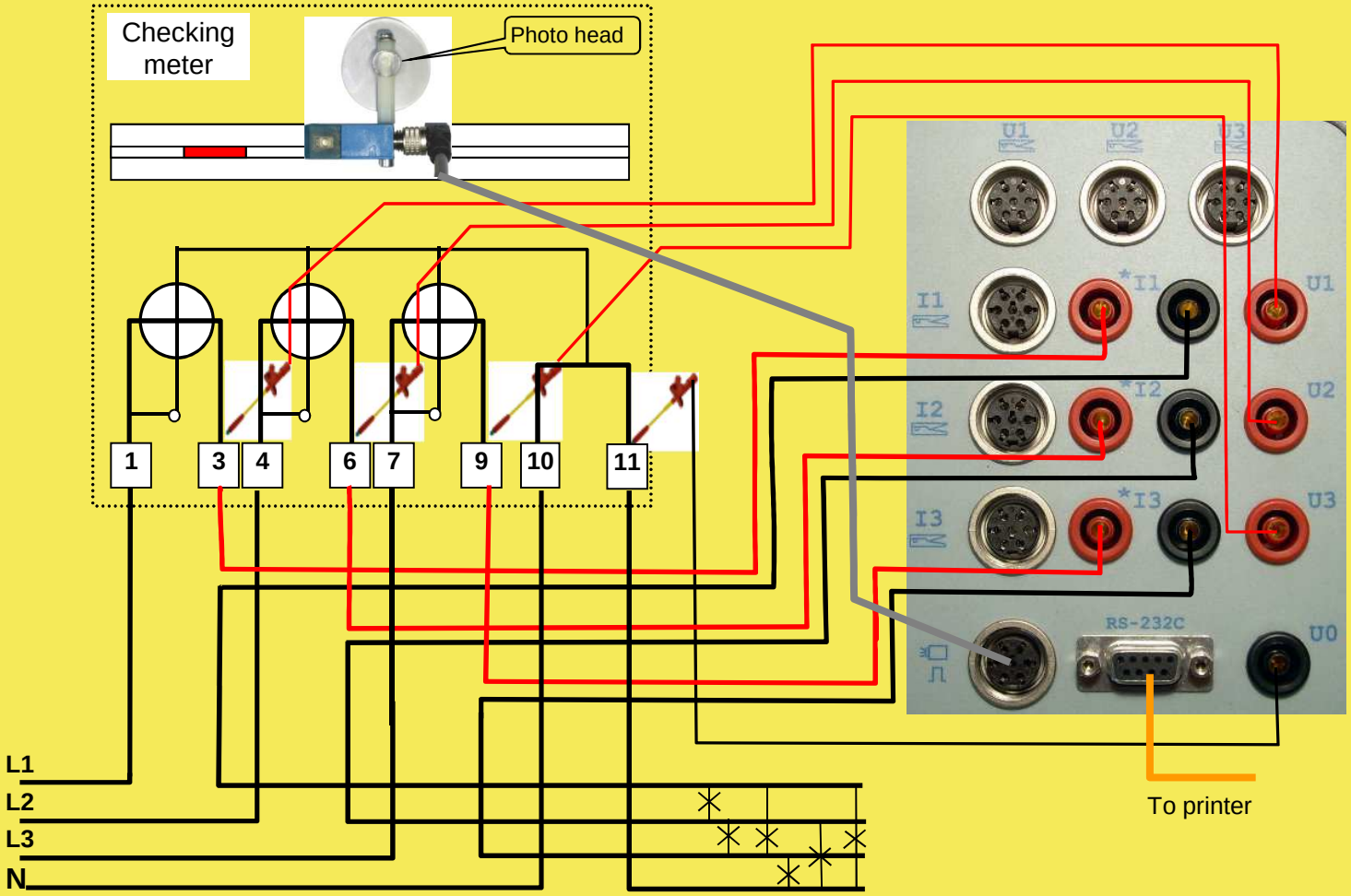

CHECKING THE ERROR OF THE ONE PHASE METER USING ANALYSER Calport 100Plus

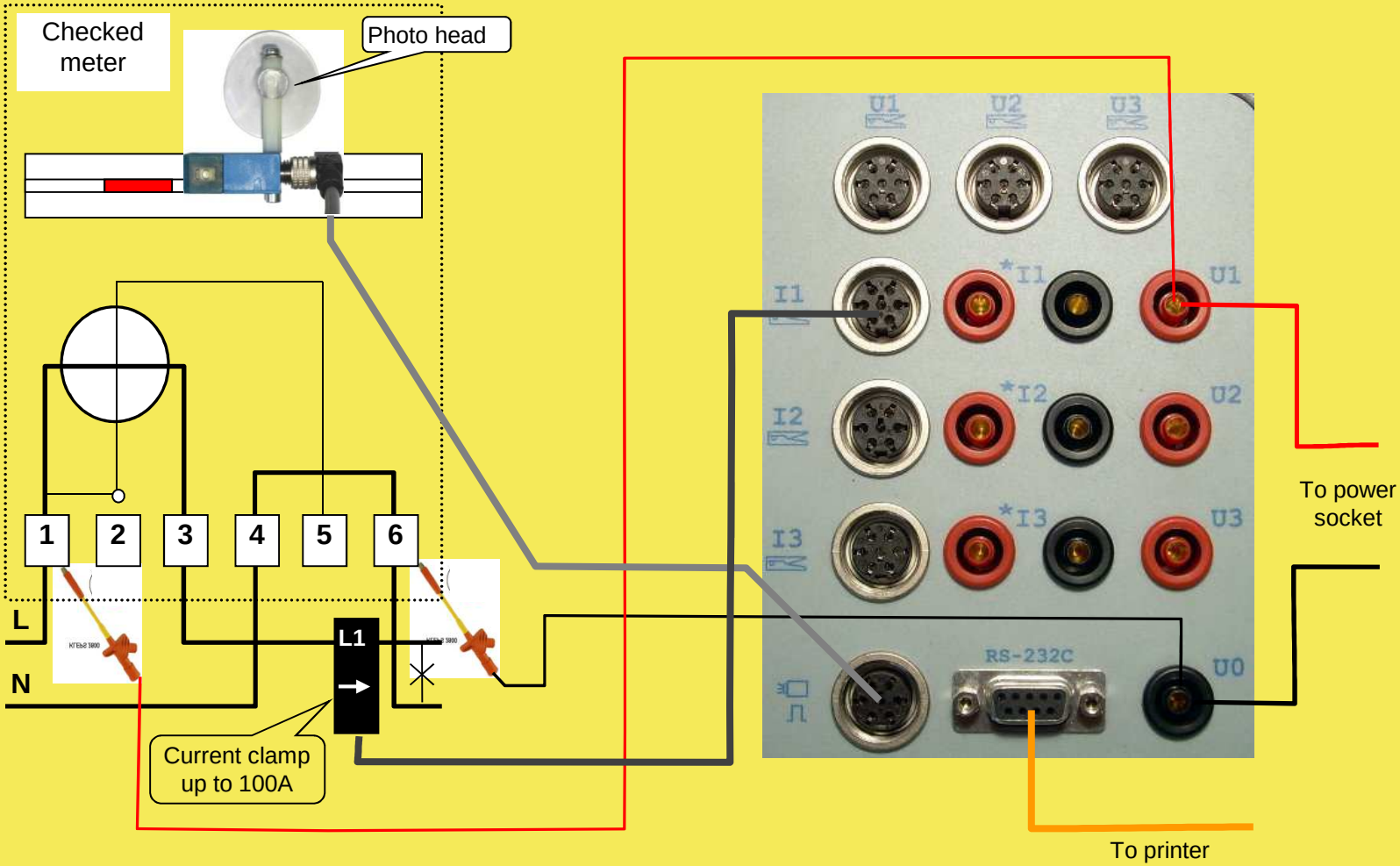

CHECKING THE ERROR OF THE THREE PHASE METER USING ANALYSER Calport 100Plus

Connecting of the Analyser Calport 100Plus to three phase meter directly connected

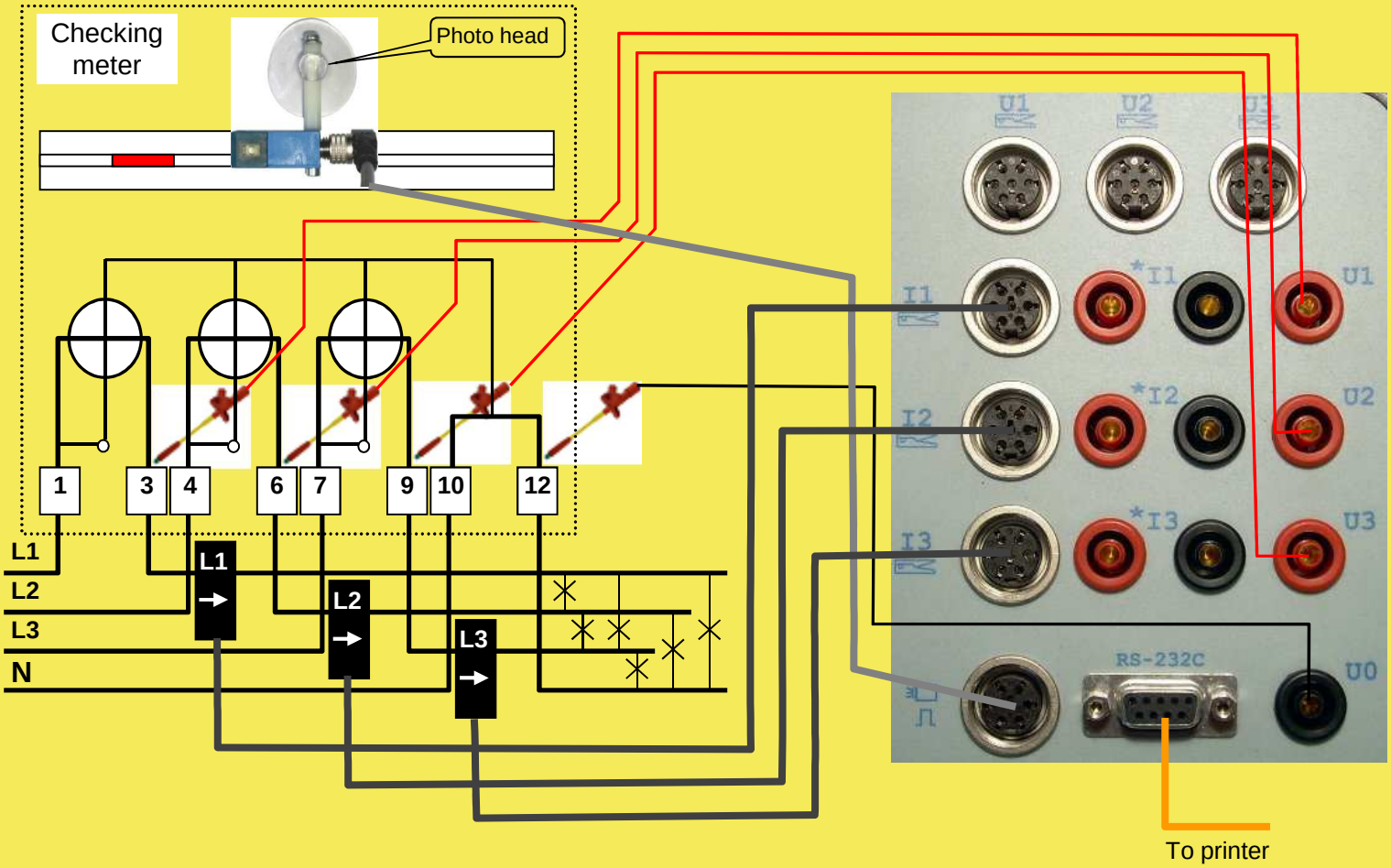

CHECKING THE ERROR OF THE THREE PHASE METER USING ANALYSER Calport 100Plus

Connecting of the Analyser Calport 100Plus to three phase meter connected with Current Transformer (CT)

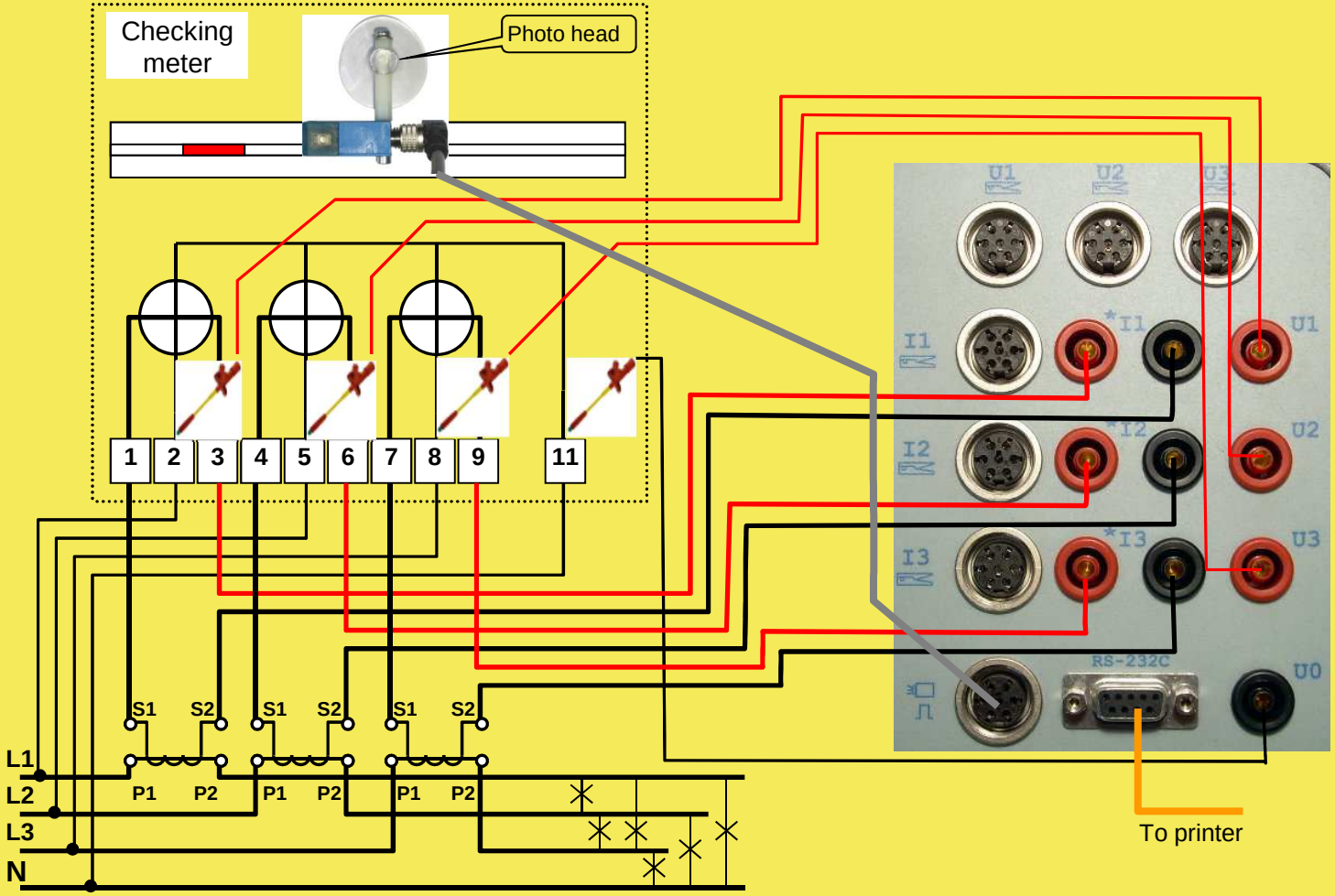

Current Transformer (CT) testing on site

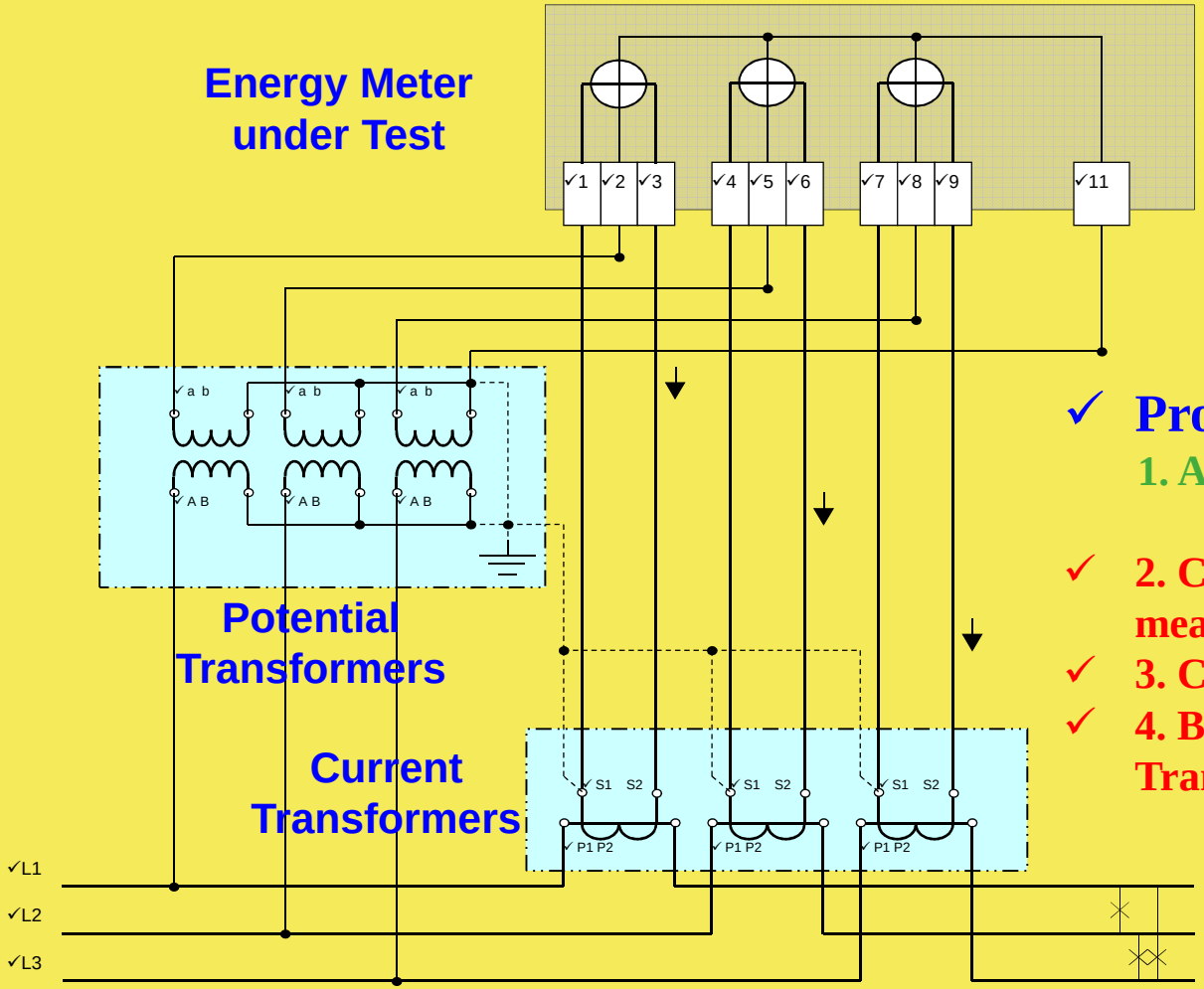

- ✓ **Problems:**
  - 1. Accuracy of Energy Meter ✓ (SOLVED)
  - ✓ 2. Connection correctness in measurement circuit
  - ✓ 3. CT ratio and phase shift error
  - ✓ 4. Burden of Current and Voltage Transformers

Calport 100Plus Analyser & Tester of Energy Meters and Network

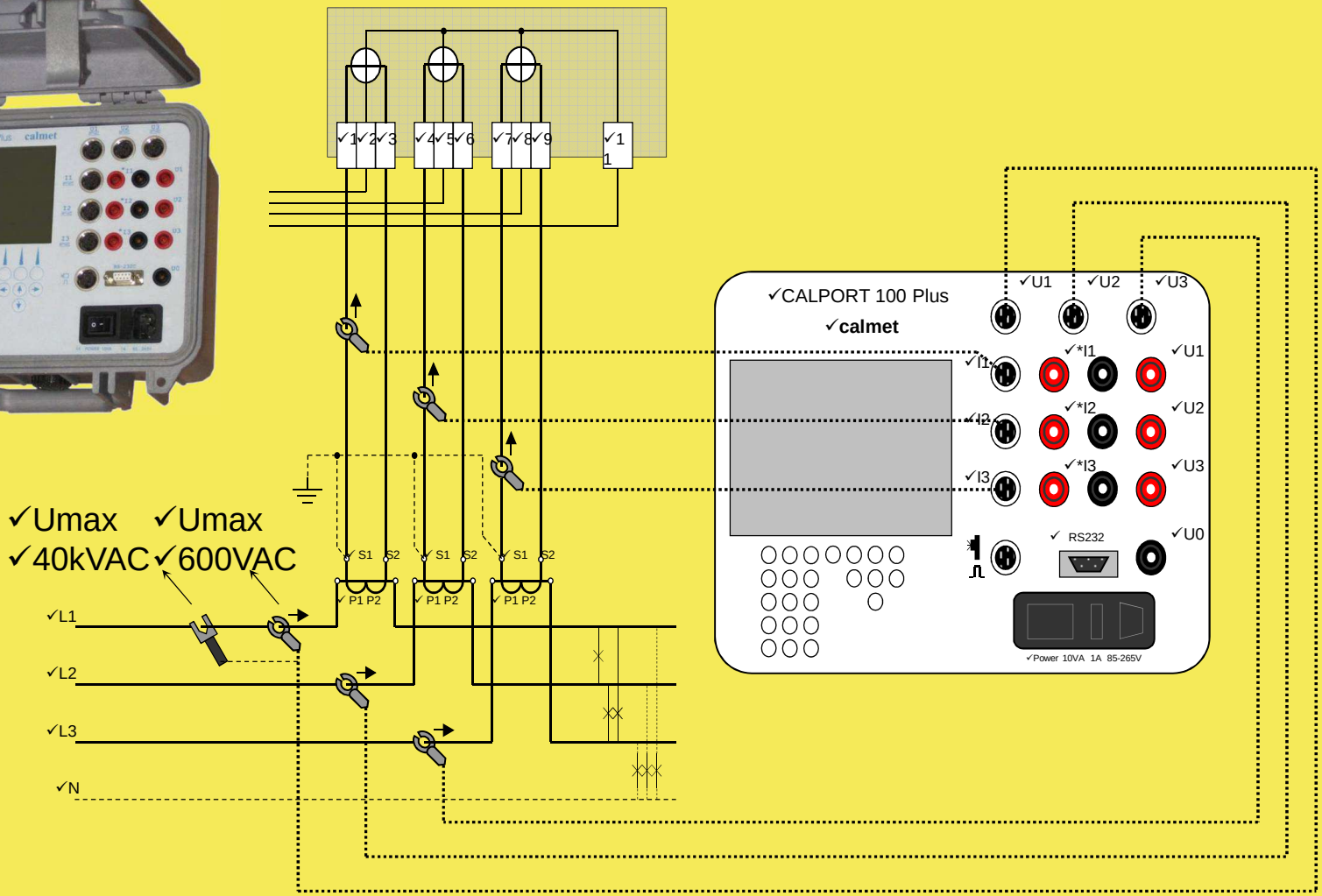

Results of connection correctness test

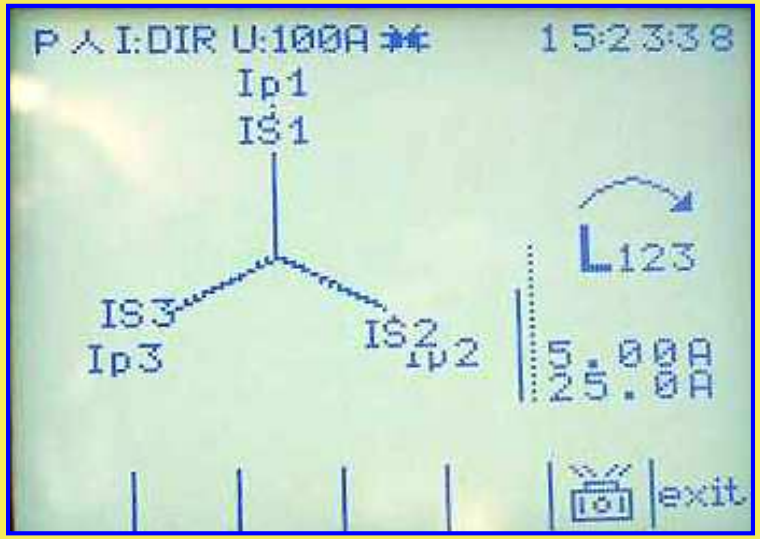

✓**Correct connection**

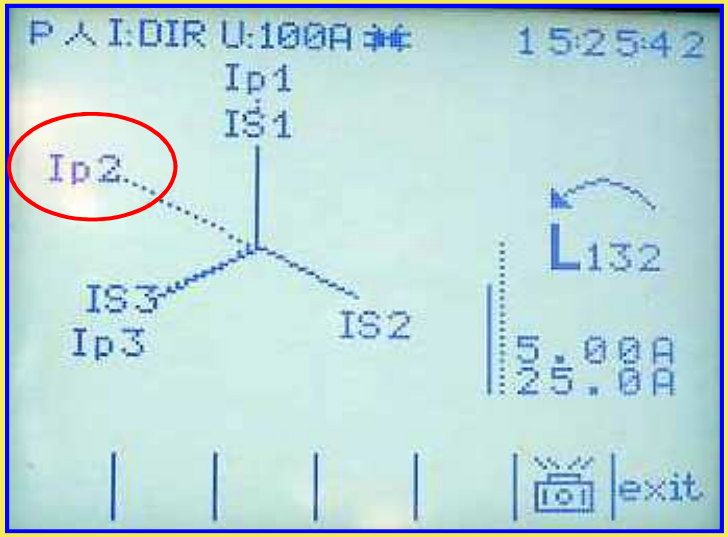

✓**Primary Current Ip2 connected in reversed way**

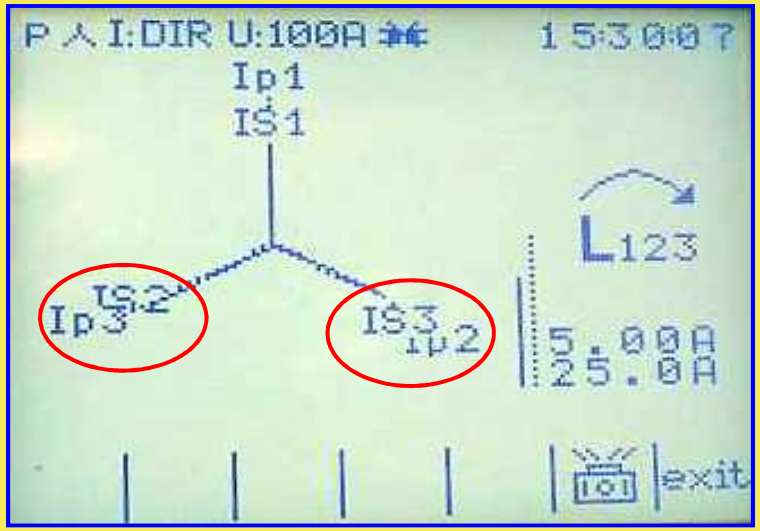

✓**Interchanged Secondary Windings IS2 & IS3**

Current Transformer (CT) ratio & phase shift error

Example: CT ratio and phase shift error test
CT: 25A/5A in phase L2

- ✓**Ip – measured value of primary current**
- ✓**Is – measured value of secondary current**
- ✓**Ip/Is – measured CT Ratio**
- ✓**I_{pn}/I_{sn} – nominal value of CT Ratio**
- ✓**ε – CT Ratio Error**
- ✓**dφ – CT Phase Shift Error**

Current Transformer (CT) burden test

ε – CT Ratio Error in [%]

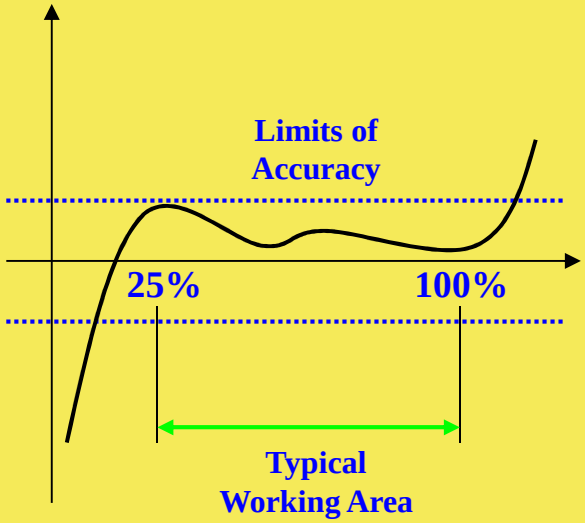

[%] Percent of Nominal Power of CT - Sn

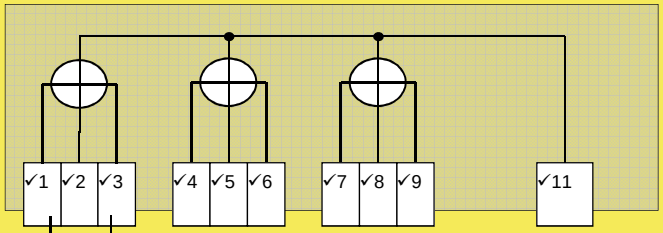

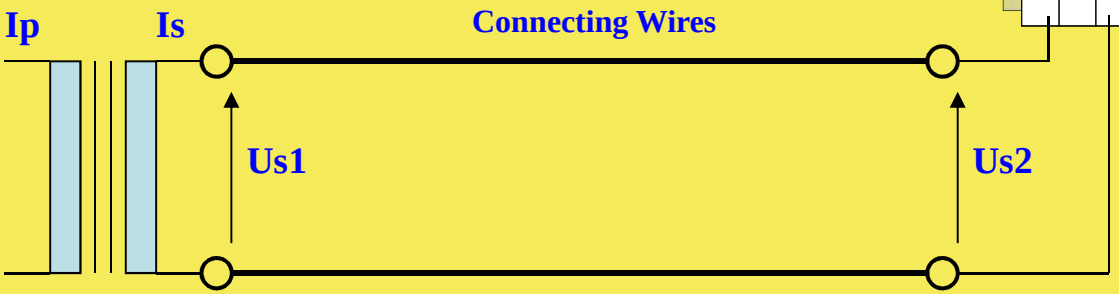

Example:

Rp – wires resistance

$$R_P = \frac{\rho_{CU} \cdot l}{S} = \frac{0,0175\Omega \frac{mm^2}{m} \cdot 2 \cdot 10m}{1mm^2} = 0,35\Omega$$

Pp – Power losses in wires

$$P_P = I_2^{\,2} \cdot R_P = 5^2 A \cdot 0,35\Omega = 8,75VA$$

Current Transformer (CT) burden test by using Calport 100Plus

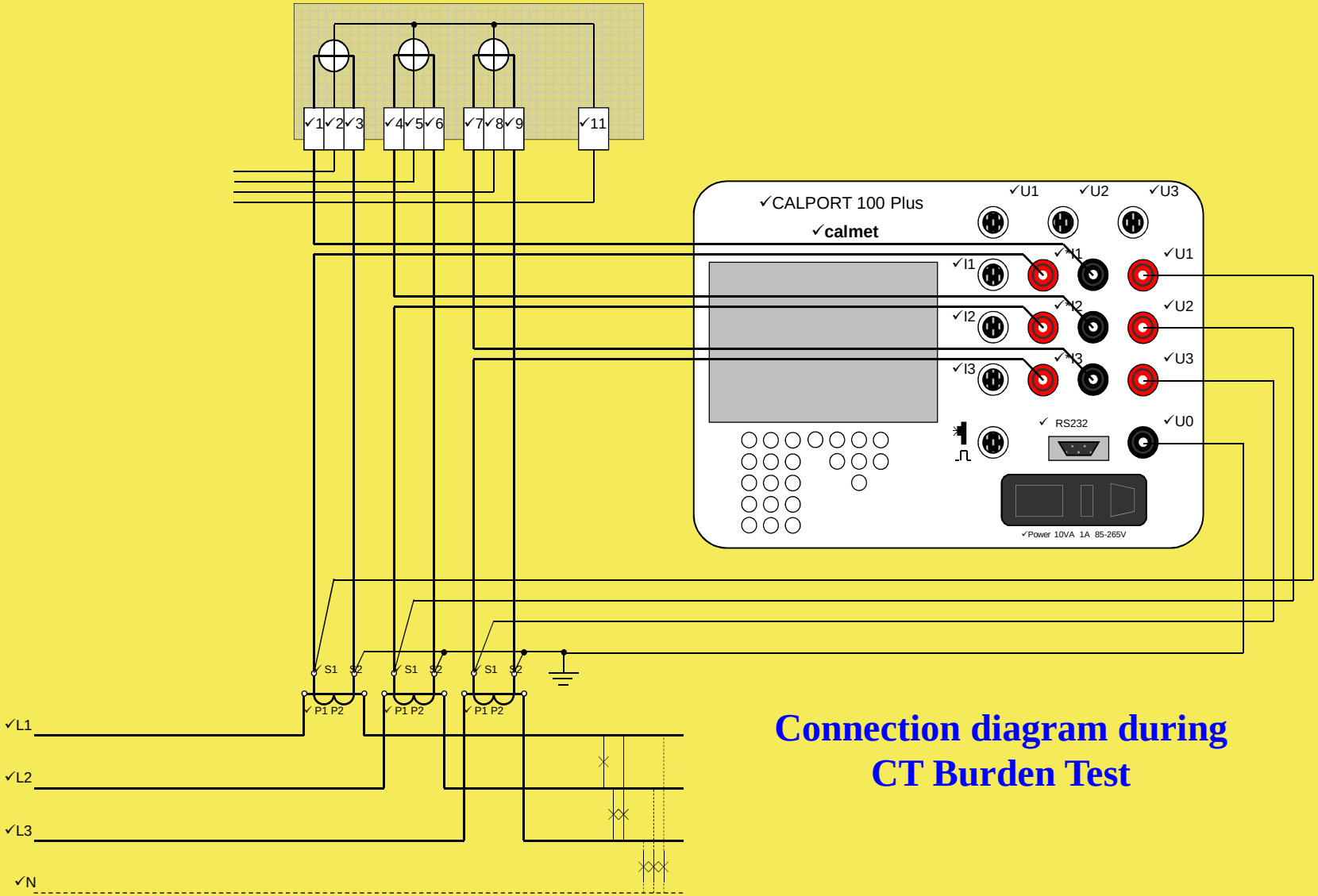

Connection diagram during CT Burden Test

CT burden testing - examples

Current Transformer with nominal power Sn=20VA

Correct, full power usage (99.88% of Sn)

Nominal Power Sn is exceeded (125.2% of Sn)

Conclusions for Current Transformer (CT) testing on site

✓**Extended measurement functions and graphic representation of results enables full test of Energy Measuring System on Site.**

✓**Tested is not only Energy Meter but also all additional accessories like CT and PT.**

✓**Tested are also working conditions of equipment by checking the wiring and burden (load) of transformers.**